FPUP # 06-105E
P06CP 01948
Client's Initials _____

FEDERAL EMERGENCY MANAGEMENT AGENCY
NATIONAL FLOOD INSURANCE PROGRAM

ELEVATION CERTIFICATE

O.M.B. No. 3067-0077
Expires December 31, 2005

DT 1-18-07

Important: Read the instructions on pages 1-7.

SECTION A - PROPERTY OWNER INFORMATION

For Insurance Company Use:
Policy Number
Company NAIC Number

BUILDING OWNER'S NAME: TED BEONAR

BUILDING STREET ADDRESS (Including Apt., Unit, Suite, and/or Bldg. No.) OR P.O. ROUTE AND BOX NO.: 5021 E GOLDEN RANCH DR

CITY: TUCSON | STATE: AZ | ZIP CODE: 85739

PROPERTY DESCRIPTION (Lot and Block Numbers, Tax Parcel Number, Legal Description, etc.): ASSESSOR'S PARCEL NO. 222-49-0100

BUILDING USE (e.g., Residential, Non-residential, Addition, Accessory, etc. Use a Comments area, if necessary.): RESIDETIAL

LATITUDE/LONGITUDE (OPTIONAL) (##° - ##' - ##.##" or ##.#####°)

HORIZONTAL DATUM: ☐ NAD 1927 ☐ NAD 1983

SOURCE: ☐ GPS (Type):____ ☐ USGS Quad Map ☐ Other: ____

SECTION B - FLOOD INSURANCE RATE MAP (FIRM) INFORMATION

B1. NFIP COMMUNITY NAME & COMMUNITY NUMBER	B2. COUNTY NAME	B3. STATE
Pima County 040073	Pima County	AZ

B4. MAP AND PANEL NUMBER	B5. SUFFIX	B6. FIRM INDEX DATE	B7. FIRM PANEL EFFECTIVE/REVISED DATE	B8. FLOOD ZONE(S)	B9. BASE FLOOD ELEVATION(S) (Zone AO, use depth of flooding)
04019C 1035	K	2/8/99	2-8-99	A	1.0

B10. Indicate the source of the Base Flood Elevation (BFE) data or base flood depth entered in B9.
☐ FIS Profile ☐ FIRM ☑ Community Determined ☐ Other (Describe): ____

B11. Indicate the elevation datum used for the BFE in B9: ☐ NGVD 1929 ☐ NAVD 1988 ☑ Other (Describe): Above Highest Existing adjacent grade

B12. Is the building located in a Coastal Barrier Resources System (CBRS) area or Otherwise Protected Area (OPA)? ☐ Yes ☒ No Designation Date N/A

SECTION C - BUILDING ELEVATION INFORMATION (SURVEY REQUIRED)

C1. Building elevations are based on: ☐ ~~Construction Drawings*~~ ☐ Building Under Construction* ☒ Finished Construction
*A new Elevation Certificate will be required when construction of the building is complete.

C2. Building Diagram Number 1 (Select the building diagram most similar to the building for which this certificate is being completed - see pages 6 and 7. If no diagram accurately represents the building, provide a sketch or photograph.)

C3. Elevations – Zones A1-A30, AE, AH, A (with BFE), VE, V1-V30, V (with BFE), AR, AR/A, AR/AE, AR/A1-A30, AR/AH, AR/AO
Complete Items C3.-a-i below according to the building diagram specified in Item C2. State the datum used. If the datum is different from the datum used for the BFE in Section B, convert the datum to that used for the BFE. Show field measurements and datum conversion calculation. Use the space provided or the Comments area of Section D or Section G, as appropriate, to document the datum conversion.

Datum N/A Conversion/Comments N/A LOCAL AB 1-18-2007

Elevation reference mark used N/A Does the elevation reference mark used appear on the FIRM? ☐ Yes ☑ No

- a) Top of bottom floor (including basement or enclosure) B 100.00 ~~N/A~~ ft.(m)
- b) Top of next higher floor N/A ft.(m)
- c) Bottom of lowest horizontal structural member (V zones only) N/A ft.(m)
- d) Attached garage (top of slab) N/A ft.(m) SEE COMMENTS
- e) Lowest elevation of machinery and/or equipment servicing the building (Describe in a Comments area) N/A ft.(m)
- f) Lowest adjacent (finished) grade (LAG) 99.50 ~~N/A~~ ft.(m) AB
- g) Highest adjacent (finished) grade (HAG) 99.70 ~~N/A~~ ft.(m) AB
- h) No. of permanent openings (flood vents) within 1 ft. above adjacent grade 4
- i) Total area of all permanent openings (flood vents) in C3.h 508 sq. in. (sq. cm)

License Number, Embossed Seal, Signature, and Date

REGISTERED LAND SURVEYOR CERTIFICATE NO. 35111 GREGORY W. BAUER DATE SIGNED 1-17-07 ARIZONA U.S.A.

SECTION D - SURVEYOR, ENGINEER, ~~OR ARCHITECT~~ CERTIFICATION

This certification is to be signed and sealed by a land surveyor, ~~engineer, or architect~~ authorized by law to certify elevation information.
I certify that the information in Sections A, B, and C on this certificate represents my best efforts to interpret the data available.
I understand that any false statement may be punishable by fine or imprisonment under 18 U.S. Code, Section 1001.

CERTIFIER'S NAME: GREGORY W BAUER | LICENSE NUMBER: 35111

TITLE: PRESIDENT | COMPANY NAME: ARROW LAND SURVEY, INC

ADDRESS: 3121 E KLEINDALE DR | CITY: 85716 | STATE: AZ | ZIP CODE: 85716

SIGNATURE: | DATE: 1-17-07 | TELEPHONE: 520-881-2155

FPUP #	For Insurance Company Use:
IMPORTANT: In these spaces, copy the corresponding information from Section A.	
BUILDING STREET ADDRESS (Including Apt., Unit, Suite, and/or Bldg. No.) OR P.O. ROUTE AND BOX NO.	Policy Number
CITY / STATE: AZ / ZIP CODE: 85	Company NAIC Number

SECTION D - SURVEYOR, ENGINEER, OR ARCHITECT CERTIFICATION (CONTINUED)

Copy both sides of this Elevation Certificate for (1) community official, (2) insurance agent/company, and (3) building owner.

COMMENTS

The lowest service equipment (C3e) is the N/A and the NO EQUIPMENT SERVICING BUILDING is/are above this elevation.

FLOOR BUILT AT GRADE. FLOOD VENTS INSTALLED

☐ Check here if attachments

SECTION E - BUILDING ELEVATION INFORMATION (SURVEY NOT REQUIRED) FOR ZONE AO AND ZONE A (WITHOUT BFE)

For Zone AO and Zone A (without BFE), complete Items E1 through E4. If the Elevation Certificate is intended for use as supporting information for a LOMA or LOMR-F, Section C must be completed.

E1. Building Diagram Number _(Select the building diagram most similar to the building for which this certificate is being completed – see pages 6 and 7. If no diagram accurately represents the building, provide a sketch or photograph.)

E2. The top of the bottom floor (including basement or enclosure) of the building is __ft.(m) __in.(cm) ☐ above or ☐ below (check one) the highest adjacent grade. (Use natural grade, if available).

E3. For Building Diagrams 6-8 with openings (see page 7), the next higher floor or elevated floor (elevation b) of the building is __ ft.(m) __in.(cm) above the highest adjacent grade. Complete items C3.h and C3.i on front of form.

E4. The top of the platform of machinery and/or equipment servicing the building is __ft.(m) __in.(cm) ☐ above or ☐ below (check one) the highest adjacent grade. (Use natural grade, if available).

E5. For Zone AO only: If no flood depth number is available, is the top of the bottom floor elevated in accordance with the community's floodplain management ordinance?
☐ Yes ☐ No ☐ Unknown. The local official must certify this information in Section G.

N/A

SECTION F - PROPERTY OWNER (OR OWNER'S REPRESENTATIVE) CERTIFICATION

The property owner or owner's authorized representative who completes Sections A, B, C (Items C3.h and C3.i only), and E for Zone A (without a FEMA-issued or community-issued BFE) or Zone AO must sign here. *The statements in Sections A, B, C, and E are correct to the best of my knowledge.*

PROPERTY OWNER'S OR OWNER'S AUTHORIZED REPRESENTATIVE'S NAME

ADDRESS | CITY | STATE | ZIP CODE

SIGNATURE | DATE | TELEPHONE

COMMENTS

☐ Check here if attachments

N/A

SECTION G - COMMUNITY INFORMATION (OPTIONAL)

The local official who is authorized by law or ordinance to administer the community's floodplain management ordinance can complete Sections A, B, C (or E), and G of this Elevation Certificate. Complete the applicable item(s) and sign below.

G1. ☐ The information in Section C was taken from other documentation that has been signed and embossed by a licensed surveyor, engineer, or architect who is authorized by state or local law to certify elevation information. (Indicate the source and date of the elevation data in the Comments area below.)

G2. ☐ A community official completed Section E for a building located in Zone A (without a FEMA-issued or community-issued BFE) or Zone AO.

G3. ☐ The following information (Items G4-G9) is provided for community floodplain management purposes.

G4. PERMIT NUMBER	G5. DATE PERMIT ISSUED	G6. DATE CERTIFICATE OF COMPLIANCE/OCCUPANCY ISSUED

G7. This permit has been issued for: ☐ New Construction ☐ Substantial Improvement

G8. Elevation of as-built lowest floor (including basement) of the building is: ___.__ft.(m) Datum: ____

G9. BFE or (in Zone AO) depth of flooding at the building site is: ___.__ft.(m) Datum: ____

LOCAL OFFICIAL'S NAME: Doug Tietenc | TITLE: Senior Hydrologist

COMMUNITY NAME: Pima County | TELEPHONE: 243-1800

SIGNATURE | DATE: 1-17-07

COMMENTS: Customer has installed Smart Vents which convey pros for 200 sq ft per vent per sq ft of Building. See attached

☐ Check here if attachments

Smart VENT
877- 441- 8368
www.smartvent.com

DETAIL DIAGRAM
MODEL 1540-570

14.5" WOOD WALL INSULATED

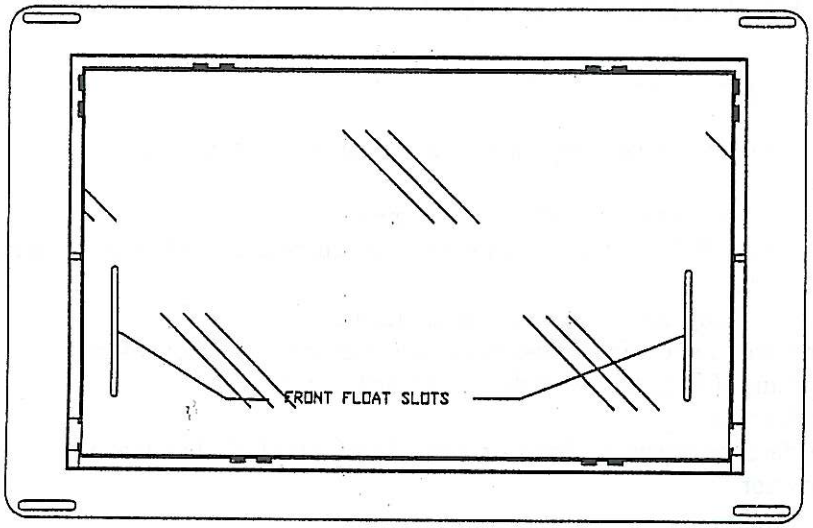

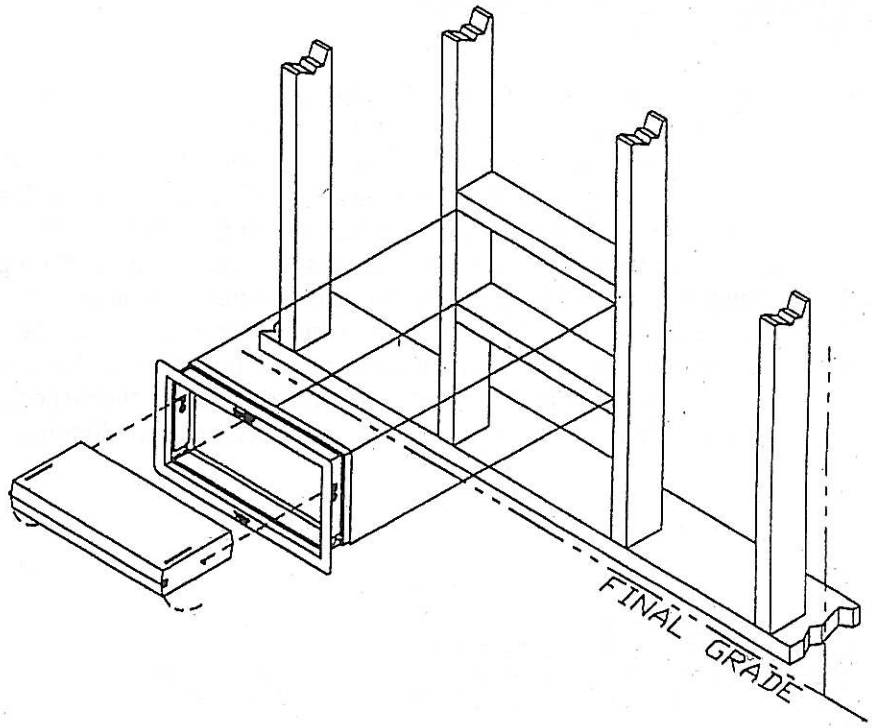

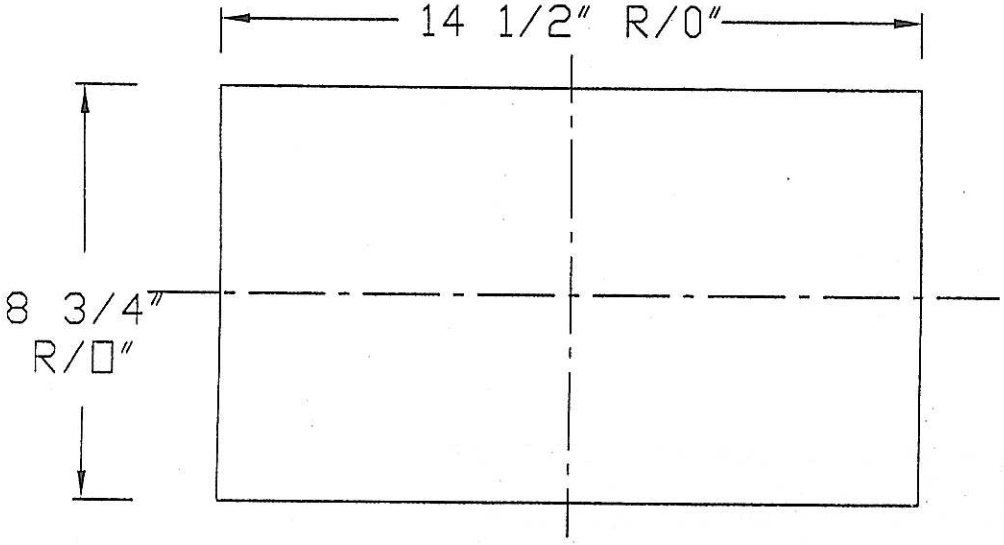

ROUGH OPENING DIAGRAM
DESIGNED TO FIT BETWEEN 2 BI WOOD STUDS

TOLERANCES UNLESS OTHERWISE SPECIFIED X.X +/-0.06 X.XX +/-0.03 X.XXX +/-0.005	Smart VENT® 877-441 8368 WWW.SMARTVENT.COM	Smart VENT Foundation Flood Vents 450 AndBro Dr. Pitman NJ 08071 14.5" WOOD WALL INSULATED MODEL 1540-570
THE INFORMATION CONTAINED IN THIS DRAWING IS THE SOLE PROPERTY OF SMART VENT INC. ANY REPRODUCTION OR USE OF THIS INFORMATION WITHOUT THE WRITTEN PERMISSION OF SARGENT METAL FABRICATORS IS PROHIBITED.	SIZE A DWG NO. 1540-570 REV A DATE 1-18-06 SHEET 1 OF 2	

Smart VENT
877- 441- 8368
www.smartvent.com

INSTALLATION INSTRUCTIONS & DETAILS MODEL 1540-570

14.5" WOOD WALL INSULATED

REV. 1-12-05

INSTALLATION INSTRUCTIONS
(SEE DIAGRAM ON BACK PAGE 1 OF 2)

1. For each vent cut a CLEAN, SQUARE, and LEVEL 14 1/2"x 8 3/4" opening in the outside sheathing. Ensure that the bottom of the opening is no more than 12" above the outside final grade.
2. Remove Vent door from Vent frame. (turn upside down, rotate bottom of door outward and slide out of frame slots)
3. Position the vent frame in the opening with SERIAL NUMBER LABEL on the BOTTOM and ensure that it is square and level. Apply a small bead of polyurethane adhesive behind the vent front frame as shown in the diagram.
4. Use 4 each flathead stainless steel screws to secure the frame through the sheathing and into the structural member.
5. Install the door by inserting the side pins into the tracks at the sides of the vent frame. Ensure the black float pins are facing downward.
9. Let the bottom of the Vent door go so that it rotates down into the Vent frame. Check that Vent door is latched on both sides.
10. To open the door insert 2 credit cards into the float slots as shown in the diagram.
11. The outside flange and screws can be covered with "J" channel or any surface treatment like brick or stone. Use CAUTION do not apply any covering that will impede the movement of the vent door in any direction.

DETAIL SPECIFICATIONS:
MATERIAL: TYPE 316 STAINLESS STEEL
OPERATION: AUTOMATIC NON-POWERED ACTIVATION AND OPERATION
VENT REMAINS CLOSED AND LOCKED UNTIL ACTIVATED
INSTALLATION:
SECURED W/ 4 STAINLESS STEEL FLATHEAD SCREWS

HYDROSTATIC RELIEF: 200 Sq. Ft per Vent
REQUIREMENTS: MINIMUM OF 2 VENTS PER ENCLOSED AREA
MOUNTED ON OPPOSITE OR ADJACENT WALLS
COLORS: WHITE (STANDARD)
STAINLESS STEEL, TAN, GRAY, AND RUST (AVAILABLE)

MEETS THE REQUIREMENTS FOR ENGINEERED OPENINGS AS SET FORTH BY:
FEMA, NFIP, ICC, & ASCE
SUPPORTIVE DOCUMENTS, TB 1-93, 44CFR 60.3(C)(5), ASCE 24-98
ICC EVALUATION # NER-624